STARTER ASSY (1ZZ–FE/3ZZ–FE)

190OH–02
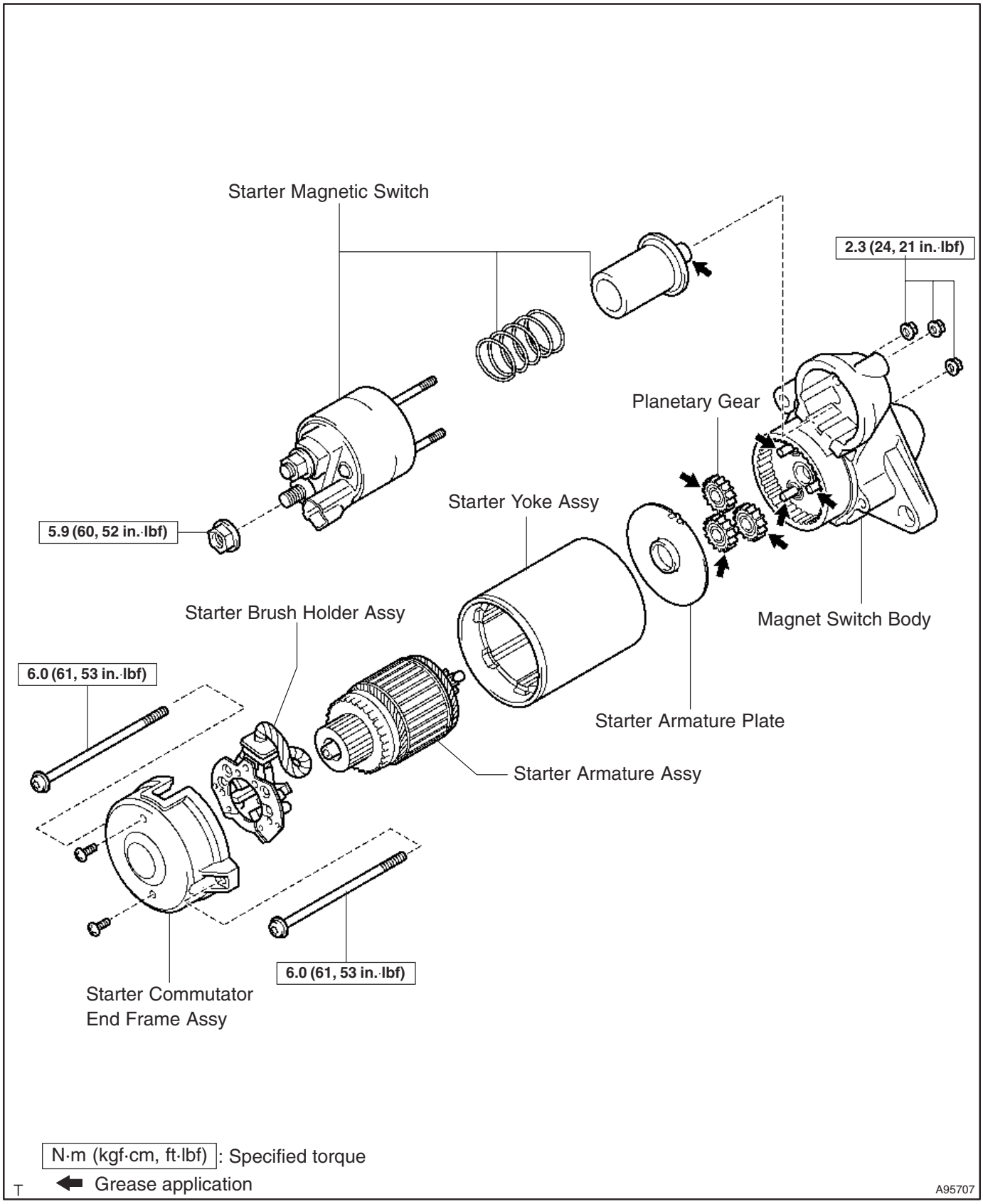
COMPONENTS